Construction of these plans should not be undertaken without a professional who can construct said project. Although every possible effort is made to insure the accuracy of these drawings; the builders and associated tradesman must carefully review all dimensions, rough openings, details submitted in these drawings and perform any necessary on-site reviews and all responsibility for the same.
Builders and associated tradesman are to adhere to the most relevant or applied local building codes if no local code has been adopted adhere to the IRC or IBC standards.
FINE LINE DRAFTING AND DESIGN IS NOT AND ARCHITECT OR ENGINEER The purchaser and/or builder of these plans releases Fine Line Drafting and Design, its officers, owners, employees or any family members associated with Fine Line Drafting and Design from any claims or legal situations that may occur before, during the construction of this project or any time thereafter.

****COPYRIGHT NOTE**** ALL RIGHTS RESERVED FINE LINE DRAFTING AND DESIGN
These drawings and specifications shall remain the property of the Designer and shall not be used for any other projects without the written consent of the Designer.
These documents are not to be reproduced,changed or copied in any form or manner what so ever.
Nor are they to be assigned to any third party without first obtaining the written permission and consent from the Designer.

ALL EXTERIOR DIMENSIONS ARE TO EXTERIOR EDGE OF BEARING (CONCRETE/STUD). ALL INTERIOR DIMENSIONS ARE TO STUD UNO.

NORMANDY COTTAGE CONDOS BUILDING 4

DRAWING SCHEDULE

COVER SHEET 1
BASEMENT PLAN 2
MAIN FLOOR PLAN 3
ELEVATIONS 4
ROOF PLAN & 2 HR FIRE WALL SECTION 5

FINE LINE DRAFTING AND DESIGN
215 Airport Road Suite 103, Bismarck, ND 58501
W- 701-595-1696 Email-fldd@bis.midco.net
www.facebook.com/finelinedrafting.bismarck.nd

SOFTPLAN 2018 ARCHITECTURAL DESIGN SOFTWARE

Bismarck Lumber

HUNTINGTONHOMES

NORMANDY COTTAGE CONDOS BUILDING 4
Superior Drive Bismarck North Dakota
HUNTINGTON HOMES INC

DRAWN BY: BJF	SCALE As Noted ON 24X18	DATE: 5/23/17	PAGE #
JOB # 1738		PRINT DATE: 9/18/2017	1

Construction of these plans should not be undertaken without a professional who can construct said project. Although every possible effort is made to insure the accuracy of these drawings; the builders and associated tradesman must carefully review all dimensions, rough openings, details submitted in these drawings and perform any necessary on-site reviews and all responsibility for the same. Builders and associated tradesman are to adhere to the most relevant or applied local building codes if no local code has been adopted adhere to the IRC or IBC standards.
FINE LINE DRAFTING AND DESIGN IS NOT AND ARCHITECT OR ENGINEER The purchaser and/or builder of these plans releases Fine Line Drafting and Design, its officers, owners, employees or any family members associated with Fine Line Drafting and Design from any claims or legal situations that may occur before, during the construction of this project or any time thereafter.

****COPYRIGHT NOTE**** ALL RIGHTS RESERVED FINE LINE DRAFTING AND DESIGN
These drawings and specifications shall remain the property of the Designer and shall not be used for any other projects without the written consent of the Designer. These documents are not to be reproduced,changed or copied in any form or manner what so ever. Nor are they to be assigned to any third party without first obtaining the written permission and consent from the Designer.

ALL EXTERIOR DIMENSIONS ARE TO EXTERIOR EDGE OF BEARING (CONCRETE/STUD). ALL INTERIOR DIMENSIONS ARE TO STUD UNO.

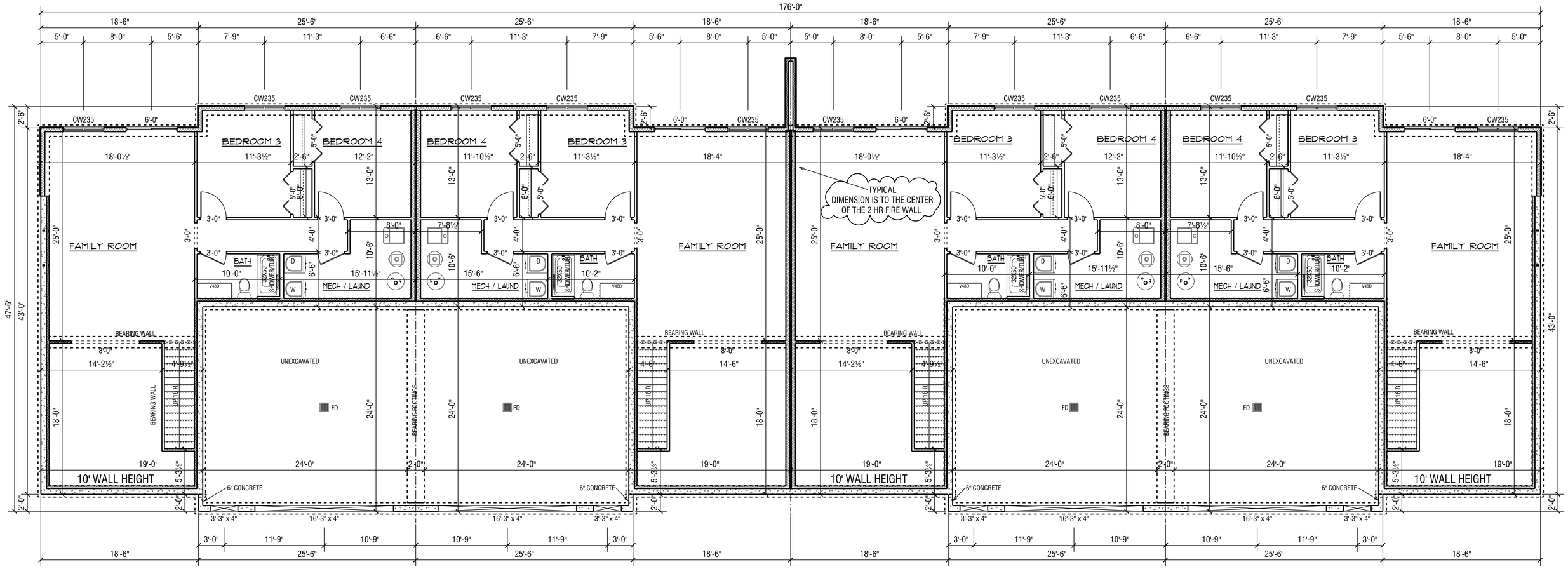

BASEMENT PLAN
SCALE: 1/8" = 1'-0"

NOTE: CONSTRUCTION NOTES ARE PER UNIT

CONSTRUCTION NOTES		SQUARE FOOTAGE	
FOUNDATION WALLS:	8" CONCRETE UNO	BASEMENT	1,405
MAIN FLR EXTERIOR WALLS:	2"X6"	MAIN FLR	1,405
INTERIOR WALLS:	2"X4" UNO	SECOND FLR	NA
WALL HEIGHT:	9'-0" UNO MAIN FLOOR	GARAGE	611
GARAGE WALL HEIGHT:	9' 3-1/4" (VERIFY)		
FLOOR TRUSSES:	20" ENGINEERED FLOOR TRUSSES		

FINE LINE DRAFTING AND DESIGN
215 Airport Road Suite 103, Bismarck, ND 58501
W- 701-595-1696 Email-fldd@bis.midco.net
www.facebook.com/finelinedrafting.bismarck.nd

SOFTPLAN 2018 ARCHITECTURAL DESIGN SOFTWARE

Bismarck Lumber

HUNTINGTONHOMES

NORMANDY COTTAGE CONDOS BUILDING 4
Superior Drive Bismarck North Dakota
HUNTINGTON HOMES INC

DRAWN BY: BJF	SCALE 1/8" = 1'-0" ON 24X18	DATE: 5/23/17	PAGE #
JOB # 1738		PRINT DATE: 9/18/2017	2

Construction of these plans should not be undertaken without a professional who can construct said project. Although every possible effort is made to insure the accuracy of these drawings; the builders and associated tradesman must carefully review all dimensions, rough openings, details submitted in these drawings and perform any necessary on-site reviews and all responsibility for the same. Builders and associated tradesman are to adhere to the most relevant or applied local building codes if no local code has been adopted adhere to the IRC or IBC standards.
FINE LINE DRAFTING AND DESIGN IS NOT AND ARCHITECT OR ENGINEER The purchaser and/or builder of these plans releases Fine Line Drafting and Design, its officers, owners, employees or any family members associated with Fine Line Drafting and Design from any claims or legal situations that may occur before, during the construction of this project or any time thereafter.

****COPYRIGHT NOTE**** ALL RIGHTS RESERVED FINE LINE DRAFTING AND DESIGN
These drawings and specifications shall remain the property of the Designer and shall not be used for any other projects without the written consent of the Designer. These documents are not to be reproduced,changed or copied in any form or manner what so ever. Nor are they to be assigned to any third party without first obtaining the written permission and consent from the Designer.

ALL EXTERIOR DIMENSIONS ARE TO EXTERIOR EDGE OF BEARING (CONCRETE/STUD). ALL INTERIOR DIMENSIONS ARE TO STUD UNO.

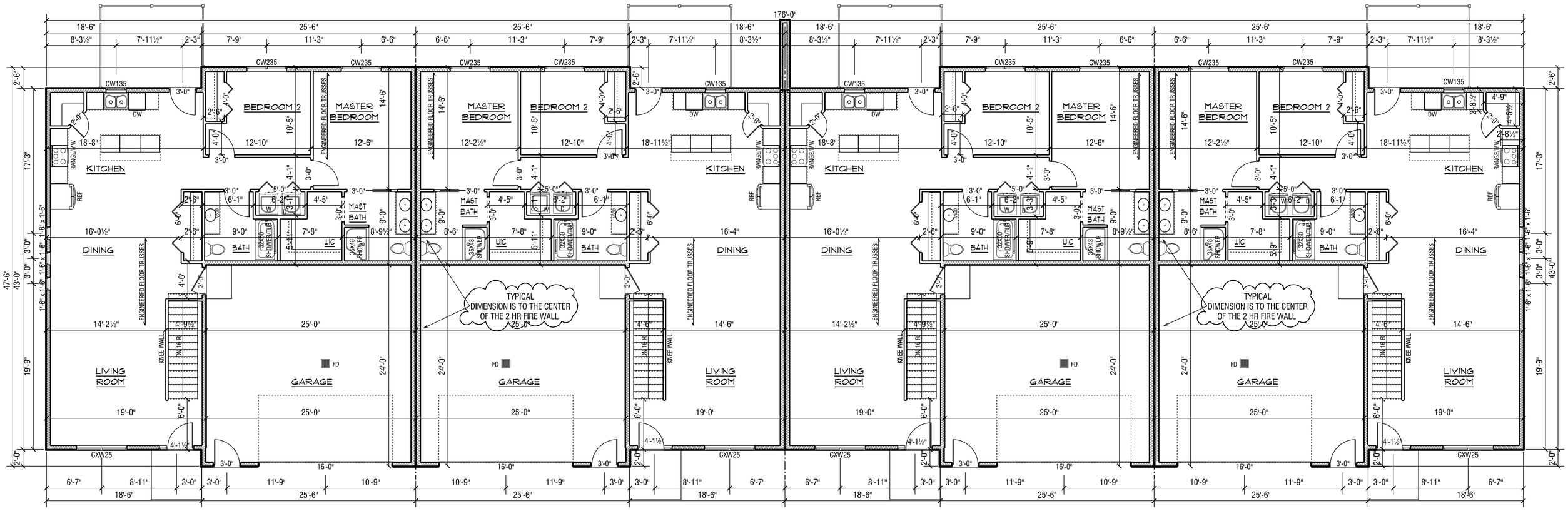

UNIT 13 -
5612 SUPERIOR DRIVE

UNIT 12 -
5616 SUPERIOR DRIVE

UNIT 11 -
5620 SUPERIOR DRIVE

UNIT 10 -
5624 SUPERIOR DRIVE

MAIN FLOOR PLAN
SCALE: 1/8" = 1'-0"

NOTE: CONSTRUCTION NOTES ARE PER UNIT

CONSTRUCTION NOTES		SQUARE FOOTAGE	
FOUNDATION WALLS:	8" CONCRETE UNO	BASEMENT	1,405
MAIN FLR EXTERIOR WALLS:	2"X6"	MAIN FLR	1,405
INTERIOR WALLS:	2"X4" UNO	SECOND FLR	NA
WALL HEIGHT:	9'-0" UNO MAIN FLOOR	GARAGE	611
GARAGE WALL HEIGHT:	9' 3-1/4" (VERIFY)		
FLOOR TRUSSES:	20" ENGINEERED FLOOR TRUSSES		

FINE LINE DRAFTING AND DESIGN
215 Airport Road Suite 103, Bismarck, ND 58501
W- 701-595-1696 Email-fldd@bis.midco.net
www.facebook.com/finelinedrafting.bismarck.nd

SOFTPLAN 2018 ARCHITECTURAL DESIGN SOFTWARE

Bismarck Lumber

HUNTINGTONHOMES

NORMANDY COTTAGE CONDOS BUILDING 4
Superior Drive Bismarck North Dakota
HUNTINGTON HOMES INC

DRAWN BY: BJF	SCALE 1/8" = 1'-0" ON 24X18	DATE: 5/23/17	PAGE #
JOB # 1738		PRINT DATE: 9/18/2017	3

Construction of these plans should not be undertaken without a professional who can construct said project. Although every possible effort is made to insure the accuracy of these drawings; the builders and associated tradesman must carefully review all dimensions, rough openings, details submitted in these drawings and perform any necessary on-site reviews and all responsibility for the same. Builders and associated tradesman are to adhere to the most relevant or applied local building codes if no local code has been adopted adhere to the IRC or IBC standards.
FINE LINE DRAFTING AND DESIGN IS NOT AND ARCHITECT OR ENGINEER The purchaser and/or builder of these plans releases Fine Line Drafting and Design, its officers, owners, employees or any family members associated with Fine Line Drafting and Design from any claims or legal situations that may occur before, during the construction of this project or any time thereafter.

****COPYRIGHT NOTE**** ALL RIGHTS RESERVED FINE LINE DRAFTING AND DESIGN
These drawings and specifications shall remain the property of the Designer and shall not be used for any other projects without the written consent of the Designer. These documents are not to be reproduced,changed or copied in any form or manner what so ever. Nor are they to be assigned to any third party without first obtaining the written permission and consent from the Designer.

ALL EXTERIOR DIMENSIONS ARE TO EXTERIOR EDGE OF BEARING (CONCRETE/STUD). ALL INTERIOR DIMENSIONS ARE TO STUD UNO.

FRONT ELEVATION
SCALE: 1/8" = 1'-0"

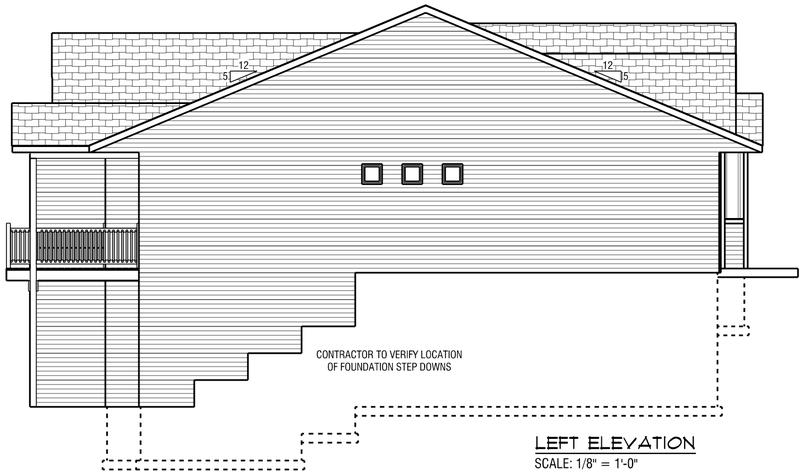

LEFT ELEVATION
SCALE: 1/8" = 1'-0"

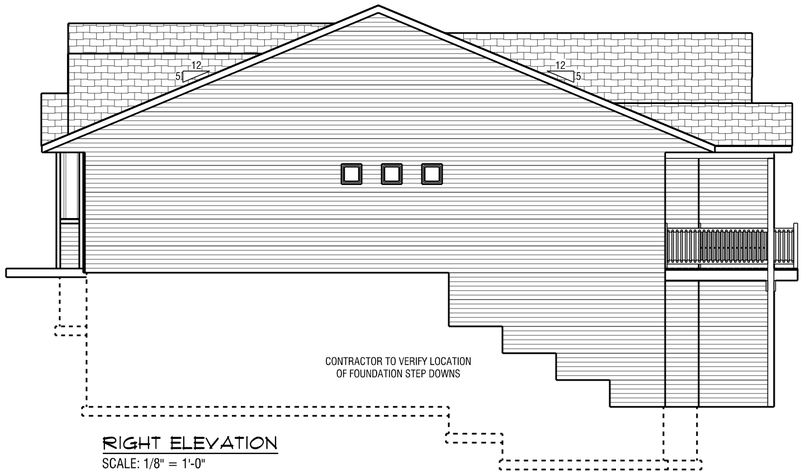

RIGHT ELEVATION
SCALE: 1/8" = 1'-0"

REAR ELEVATION
SCALE: 1/8" = 1'-0"

FINE LINE DRAFTING AND DESIGN
215 Airport Road Suite 103, Bismarck, ND 58501
W- 701-595-1696 Email-fldd@bis.midco.net
www.facebook.com/finelinedrafting.bismarck.nd

SOFTPLAN 2018 ARCHITECTURAL DESIGN SOFTWARE

Bismarck Lumber

HUNTINGTONHOMES

NORMANDY COTTAGE CONDOS BUILDING 4
Superior Drive Bismarck North Dakota
HUNTINGTON HOMES INC

DRAWN BY: BJF	SCALE 1/8" = 1'-0" ON 24X18	DATE: 5/23/17	PAGE #
JOB # 1738		PRINT DATE: 9/18/2017	4

Construction of these plans should not be undertaken without a professional who can construct said project. Although every possible effort is made to insure the accuracy of these drawings; the builders and associated tradesman must carefully review all dimensions, rough openings, details submitted in these drawings and perform any necessary on-site reviews and all responsibility for the same. Builders and associated tradesman are to adhere to the most relevant or applied local building codes if no local code has been adopted adhere to the IRC or IBC standards.
FINE LINE DRAFTING AND DESIGN IS NOT AND ARCHITECT OR ENGINEER The purchaser and/or builder of these plans releases Fine Line Drafting and Design, its officers, owners, employees or any family members associated with Fine Line Drafting and Design from any claims or legal situations that may occur before, during the construction of this project or any time thereafter.

****COPYRIGHT NOTE**** ALL RIGHTS RESERVED FINE LINE DRAFTING AND DESIGN
These drawings and specifications shall remain the property of the Designer and shall not be used for any other projects without the written consent of the Designer. These documents are not to be reproduced,changed or copied in any form or manner what so ever. Nor are they to be assigned to any third party without first obtaining the written permission and consent from the Designer.

ALL EXTERIOR DIMENSIONS ARE TO EXTERIOR EDGE OF BEARING (CONCRETE/STUD). ALL INTERIOR DIMENSIONS ARE TO STUD UNO.

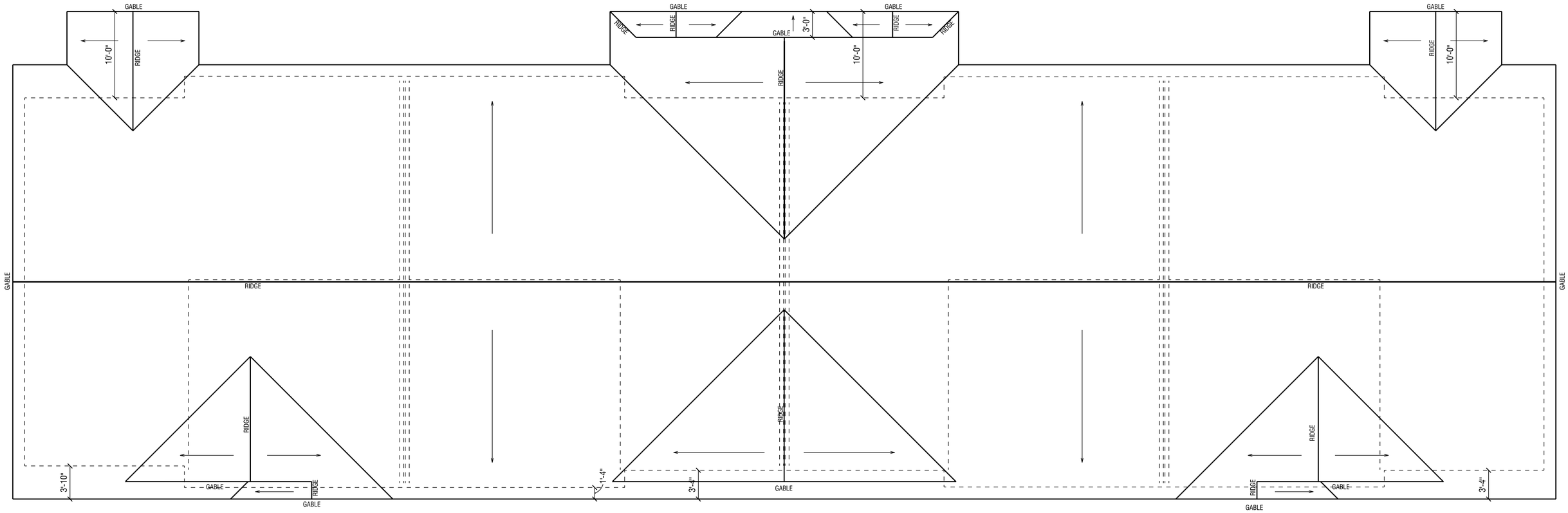

ROOF NOTES
1. ROOF PITCH - 5/12
2. ROOF HEEL HT - 8"
3. ROOF OVERHANG - 16" UNO

ROOF PLAN
SCALE: 1/8" = 1'-0"

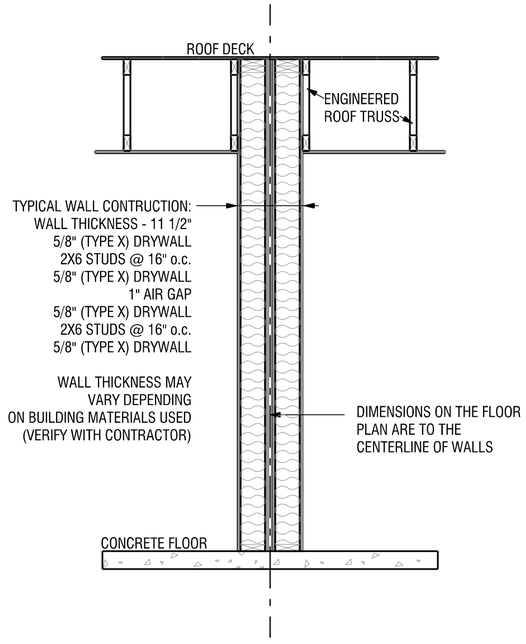

2 HR FIRE WALL SECTION
SCALE: 1/2" = 1'-0"

FINE LINE DRAFTING AND DESIGN
215 Airport Road Suite 103, Bismarck, ND 58501
W- 701-595-1696 Email-fldd@bis.midco.net
www.facebook.com/finelinedrafting.bismarck.nd

SOFTPLAN 2018 ARCHITECTURAL DESIGN SOFTWARE

Bismarck Lumber

HUNTINGTON HOMES

NORMANDY COTTAGE CONDOS BUILDING 4
Superior Drive Bismarck North Dakota
HUNTINGTON HOMES INC

DRAWN BY: BJF	SCALE As Noted ON 24X18	DATE: 5/23/17	PAGE #
JOB # 1738		PRINT DATE: 9/18/2017	5